Static pre-dimensioning – EckTec

Product description

The EckTec connector can replace the conventional brace. This allows a better look without disruptive braces, especially at low installation heights.

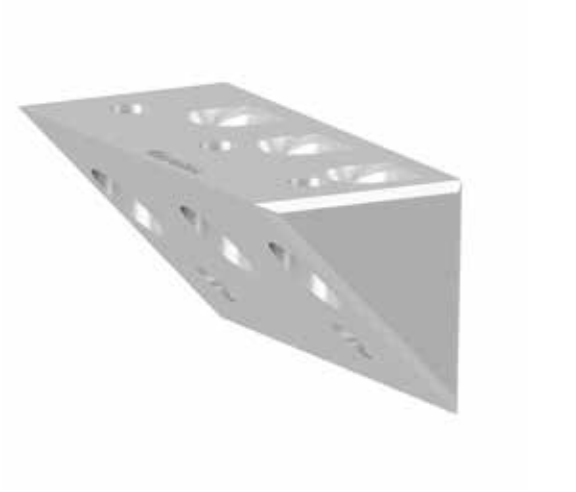

Material

- EN-AW 6063-T66 (AlMgSi0,5)

Advantages

- Supports load absorption with horizontal forces
- Pre-assembly at the factory optional
- Many different areas of use

Product table

EckTec		
Art. no.	Dimensions [mm][a)]	PU*
975664	50 x 50 x 100	1

a) Width x height x depth

* incl. two Paneltwistec countersunk button head blue TX20 4,0 x 40/24 mm, three KonstruX ST countersunk button head blue TX40 8 x 95 mm and three KonstruX ST countersunk button head blue TX40 8 x 155 mm

Instructions for use

The EckTec connector is fixed with two 4 x 40 Paneltwistecs. The first KonstruX ST 8 x 155 fully-threaded screws are then set at 25° in the posts. After mounting the cross beam, the other 8 x 95 KonstruX ST fully-threaded screws can be set at 90°. Minimum cross-section of the beam: 120 x 120 mm.

© by E.u.r.o.Tec GmbH · Last updated 09/2020 · Subject to changes, additions, typesetting and printing errors.

E.u.r.o.Tec GmbH • Unter dem Hofe 5 • D-58099 Hagen
Tel. +49 2331 62 45-0 • Fax +49 2331 62 45-200 • E-Mail info@eurotec.team

Static pre-dimensioning – EckTec

Pre-dimensioning

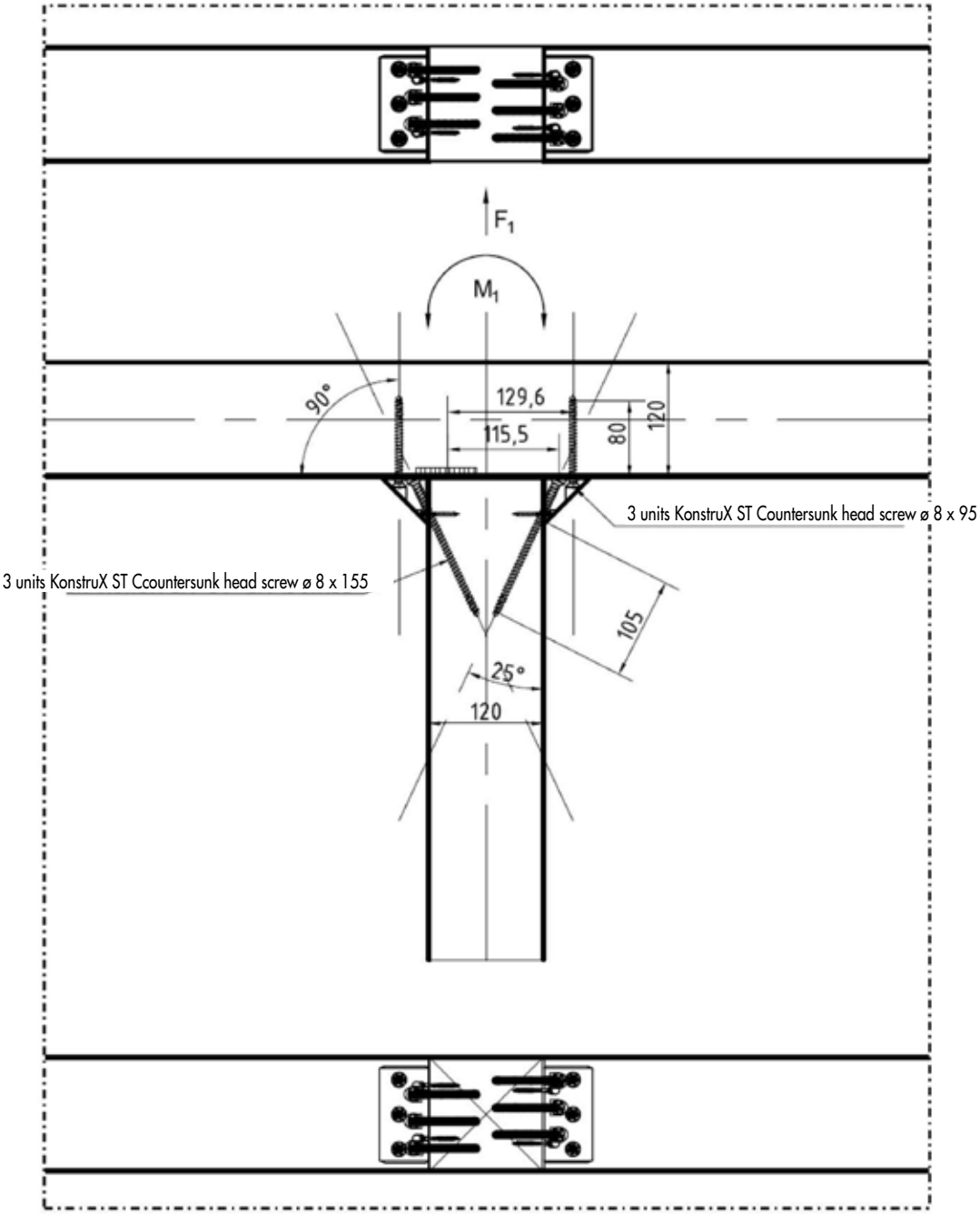

© by E.u.r.o.Tec GmbH · Last updated 09/2020 · Subject to changes, additions, typesetting and printing errors.

E.u.r.o.Tec GmbH • Unter dem Hofe 5 • D-58099 Hagen
Tel. +49 2331 62 45-0 • Fax +49 2331 62 45-200 • E-Mail info@eurotec.team

Static pre-dimensioning – EckTec

Torque carrying capacity M_1

Pull-out shelf with 3 units KonstruX ST countersunk head screw ø 8 x 95

$n_{ef} = 3^{0,9}$; k_{ax} (90°) = 1; d = 8 mm; l_{ef} = 80 mm; C24 ρk = 350 kg/m³

$F_{ax,90,Rk} = 3^{0,9} \times 1 \times 11,1 \times 8 \times 80 \times (350/350)^{0,8} = 19095$ N

$F_{ax,90,Rk} = 19095$ N ≙ 19,1 kN

Pull-out shelf with 3 units KonstruX ST countersunk head screw ø 8 x 155

$n_{ef} = 3^{0,9}$; k_{ax} (25°) = 0,3 + (0,7 x 25°)/(45°) = 0,689; d = 8 mm; l_{ef} = 105 mm; C24 ρk = 350 kg/m³

$F_{ax,25,Rk} = 3^{0,9} \times 0,689 \times 11,1 \times 8 \times 105 \times (350/350)^{0,8} = 17268$ N

$F_{ax,90,Rk} = 17268$ N ≙ 17,3 kN

min M_{1k} = {19095 N x 129,6 mm = 2474712 Nmm
{17268 N x 115,5 mm x cos (25°) = 1807589 Nmm

Verification of bearing pressure due to M_1

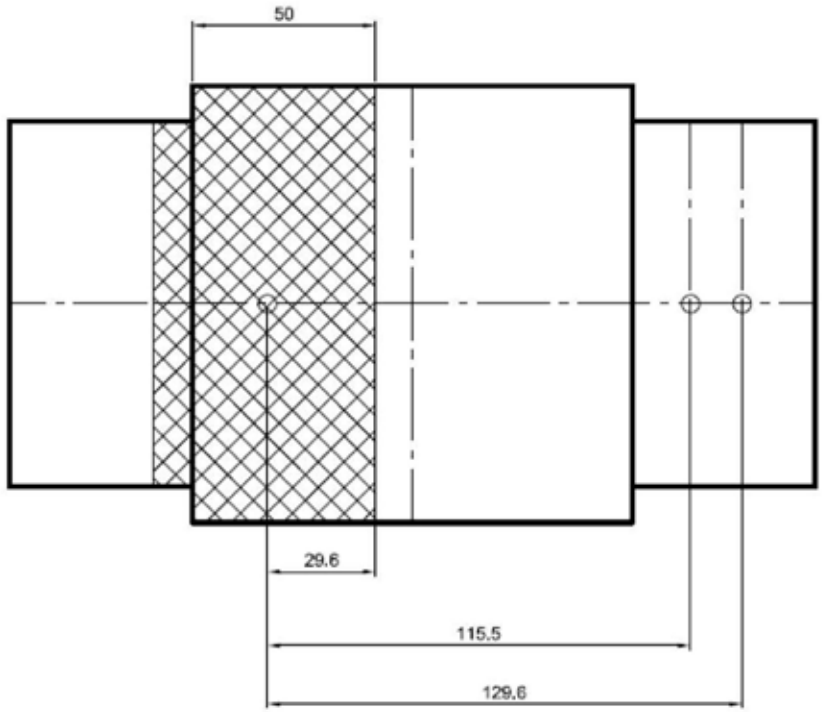

© by E.u.r.o.Tec GmbH · Last updated 09/2020 · Subject to changes, additions, typesetting and printing errors.

E.u.r.o.Tec GmbH • Unter dem Hofe 5 • D-58099 Hagen
Tel. +49 2331 62 45-0 • Fax +49 2331 62 45-200 • E-Mail info@eurotec.team

Static pre-dimensioning – EckTec

Calculation of eccentric pressing length L
Shear force bearing capacity of the 2 fixing screws Paneltwistec countersunk head screw ø 4 x 40 mm:

$R_{V,k}$ = 2 x 1,35 kN = 2,7 kN

$R_{V,d}$ = 2,7 x 0,5/1,3 = 1,87 kN ≙ 1870 N

1,73 N/mm² x 100 mm x L [mm] = 1870 N

173 N/mm x L [mm] = 1870 N | ÷ 173 N/mm

L [mm] = (1870 N)/(173 N/mm) = 10,8 mm

Bearing pressure

Pressure ⊥ Fibre - C24, $f_{C,90,k}$ = 2,5 N/mm² $f^{c,90,d}$ = 2,5 N/mm² x 0,9/1,3 = 1,73 N/mm²

$A_{Pressure}$ = 10,8 mm x 100 mm + 50 mm x 120 mm = 7080 mm²

$F_{\perp,Rd}$ = 1,73 N/mm² x 7080 mm² = 12248 N

$F_{M,d}$ = 19095 N x cos (25°) x 0,9/1,3 = 11981 N

$F_{M,d} < F_{\perp,Rd}$ → Verification met!

Result:

$M_{1,Rd}$ = 1807589 Nmm x 0,9/1,3 = 1251408 Nmm ≙ 1,25 kN

$M_{1,Rd}$ = 1807589 Nmm x 1,0/1,3 = 13904553 Nmm ≙ 1,39 kNm

Torque carrying capacity M_1 with simultaneously occurring tractive force F_1

Pull-out shelf with 2 KonstruX ST countersunk head screw ø 8 x 95

$n_{ef} = 2^{0,9}$; k_{ax} (90°) = 1; d = 8 mm; l_{ef} = 80 mm; C24 ρk = 350 kg/m³

$F_{ax,90,Rk} = 2^{0,9} \times 1 \times 11,1 \times 8 \times 80 \times (350/350)^{0,8}$ = 13257 N

$F_{ax,90,Rk}$ = 13257 N ≙ 13,26 kN

© by E.u.r.o.Tec GmbH · Last updated 09/2020 · Subject to changes, additions, typesetting and printing errors.

E.u.r.o.Tec GmbH • Unter dem Hofe 5 • D-58099 Hagen
Tel. +49 2331 62 45-0 • Fax +49 2331 62 45-200 • E-Mail info@eurotec.team

Static pre-dimensioning – EckTec

Pull-out shelf with 2 KonstruX ST countersunk head screw ø 8 x 155

$n_{ef} = 2^{0,9}$; k_{ax} (25°) = 0,3 + (0,7 x 25°)/(45°) = 0,689; d = 8 mm; l_{ef} = 105 mm; C24 ρk = 350 kg/m³

$F_{ax,25,Rk} = 2^{0,9} \times 0,689 \times 11,1 \times 8 \times 105 \times (350/350)^{0,8} = 11988$ N

$F_{ax,90,Rk}$ = 11988 N ≙ 12 kN

min M_{1k} = { 13257 N x 129,6 mm = 1718107 Nmm
{11988 N x 115,5 mm x cos (25°) = 1254886 Nmm

Shear force bearing capacity of the 2 fixing screws Paneltwistec countersunk head screw ø 4 x 40 mm:

$R_{V.k}$ = 2 x 1,35 kN = 2,7 kN

$R_{V,d}$ = (2,7 x 0,5)/1,3 = 1,87 kN ≙ 1870 N

Calculation of eccentric pressing length L

1,73 N/mm² x 100 mm x L [mm] = 1870 N

173 N/mm x L [mm] = 1870 N | ÷ 173 N/mm

L [mm] = (1870 N)/(173 N/mm) = 10,8 mm

Verification of the bearing pressure due to M[1]

Pressure ⊥ Fibre - C24, $f_{C,90,k}$ = 2,5 N/mm² → $f_{c,90,d}$ = 2,5 N/mm² x 0,9/1,3 = 1,73 N/mm²

$A_{Pressure}$ = 10,8 mm x 100 mm + 50 mm x 120 mm = 7080 mm²

$F_{\perp,Rd}$ = 1,73 N/mm² x 7080 mm² = 12248 N

$F_{M,d}$ = 13257 N x cos (25°) x 0,9/1,3 = 8318 N

$F_{M,d} < F_{\perp,Rd}$ → Verification met!

Result:

$M_{1,Rd}$ = 1254886 Nmm x 0,9/1,3 = 868767 Nmm ≙ 0,86 kNm

M_(1,Rd) = 1254886 Nmm x (1,0)/(1,3) = 965297 Nmm ≙ 0,96 kNm

© by E.u.r.o.Tec GmbH · Last updated 09/2020 · Subject to changes, additions, typesetting and printing errors.

E.u.r.o.Tec GmbH • Unter dem Hofe 5 • D-58099 Hagen
Tel. +49 2331 62 45-0 • Fax +49 2331 62 45-200 • E-Mail info@eurotec.team

Static pre-dimensioning – EckTec

Tensile load-bearing capacity F_1

Pull-out shelf with 2 units KonstruX ST countersunk head screw ø 8 x 95

$n_{ef} = 2^{0,9}$; k_{ax} (90°) = 1; d = 8 mm; l_{ef} = 80 mm; C24 ρk = 350 kg/m³

$F_{ax,90,Rk} = 2^{0,9} \times 1 \times 11,1 \times 8 \times 80 \times (350/350)^{0,8} = 13257$ N

$F_{ax,90,Rk} = 13257$ N ≙ 13,3 kN

Pull-out shelf with 2 units KonstruX ST countersunk head screw ø 8 x 155

$n_{ef} = 2^{0,9}$; k_{ax} (25°) = 0,3 + (0,7 x 25°)/(45°) = 0,689; d = 8 mm; l_{ef} = 105 mm; C24 ρk = 350 kg/m³

$F_{ax,25,Rk} = 2^{0,9} \times 0,689 \times 11,1 \times 8 \times 105 \times (350/350)^{0,8} = 11988$ N

$F_{ax,90,Rk} = 11988$ N ≙ 11,9 kN

min F_{1k} = {13257 N
{11988 N x cos (25°) = 10865 N

$F_{1k} = 10865$ N ≙ 10,9 kN

$F_{1,Rd} = 10865$ N x 0,9/1,3 = 7522 N ≙ 7,5 kN

$F_{1,Rd} = 10865$ N x (1,0)/(1,3) = 8357 N ≙ 8,4 kN

Load-bearing capacity EckTec Wood - C24,ρk = 350 kg/m³ ; k_{mod} = 1,0	$M_{1,Rd}$ [kNm]	$F_{1,Rd}$ [kN]
Moment	1,39	-
Moment and Pulling force (combined)	0,96	8,4

Note: This document reflects only the results of a preliminary design/dimensioning aid.

If you are not familiar with how this product is used, and particularly with the product's intended use, please contact our Application Technology department (Technik@eurotec.team).

© by E.u.r.o.Tec GmbH · Last updated 09/2020 · Subject to changes, additions, typesetting and printing errors.

E.u.r.o.Tec GmbH • Unter dem Hofe 5 • D-58099 Hagen
Tel. +49 2331 62 45-0 • Fax +49 2331 62 45-200 • E-Mail info@eurotec.team